LOBERON

COMING HOME

15 min

1

Ax1	Bx1	Cx2
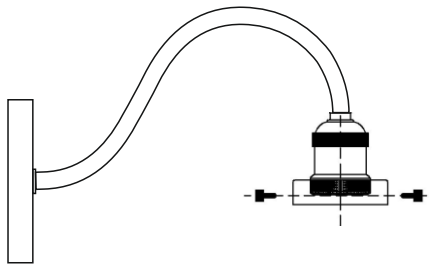	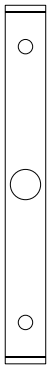	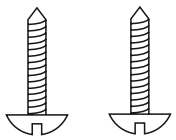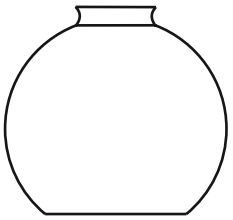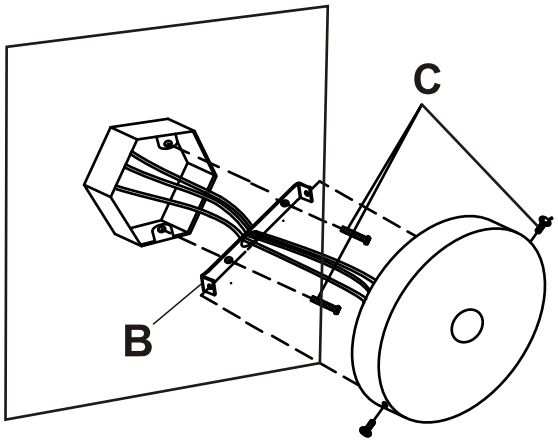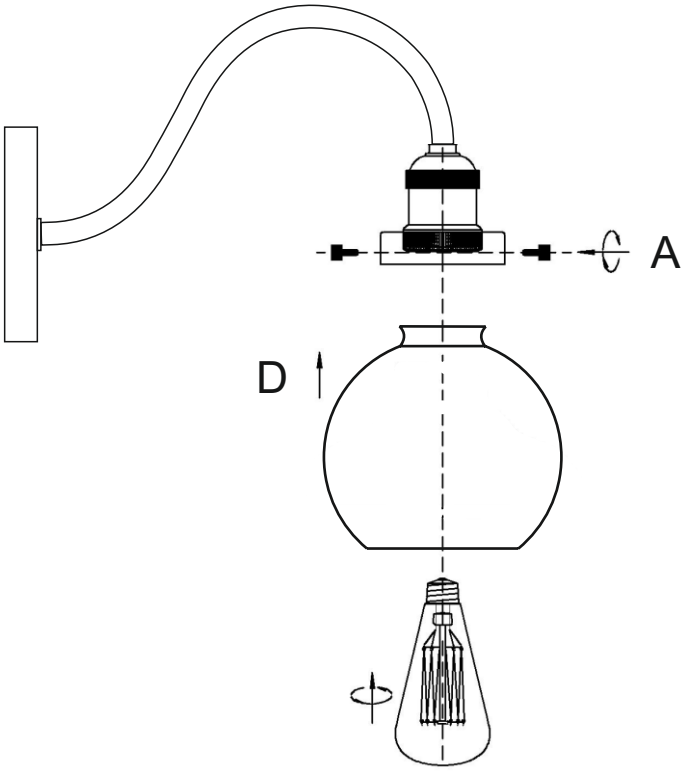
		Dx1